US008395569B2

(12) **United States Patent**
Min et al.

(10) **Patent No.: US 8,395,569 B2**
(45) **Date of Patent: Mar. 12, 2013**

(54) **DUAL PANEL TYPE ORGANIC ELECTROLUMINESCENT DISPLAY DEVICE AND METHOD OF FABRICATING THE SAME**

(75) Inventors: **Kyung-Hee Min**, Seoul (KR); **Sung-Joon Bae**, Guri-si (KR); **Joon-Suk Lee**, Seoul (KR); **Do-Hyung Kim**, Seoul (KR)

(73) Assignee: **LG Display Co., Ltd.**, Seoul (KR)

(*) Notice: Subject to any disclaimer, the term of this patent is extended or adjusted under 35 U.S.C. 154(b) by 475 days.

(21) Appl. No.: **12/588,257**

(22) Filed: **Oct. 8, 2009**

(65) **Prior Publication Data**

US 2010/0110048 A1 May 6, 2010

(30) **Foreign Application Priority Data**

Nov. 3, 2008 (KR) 10-2008-0108571

(51) **Int. Cl.**
G09G 3/32 (2006.01)

(52) **U.S. Cl.** **345/82**; 345/76; 345/83; 257/88; 257/91; 313/498; 313/505

(58) **Field of Classification Search** 345/55, 345/76–83; 313/498–506; 257/40, 52–63, 257/72, 79–103
See application file for complete search history.

(56) **References Cited**

U.S. PATENT DOCUMENTS

6,005,344	A *	12/1999	Fleming	313/498
6,414,432	B1 *	7/2002	Hieda et al.	313/506
2002/0014836	A1 *	2/2002	Codama et al.	313/504
2003/0094607	A1 *	5/2003	Guenther et al.	257/40
2005/0140303	A1 *	6/2005	Lee et al.	315/169.3
2006/0119259	A1 *	6/2006	Bae et al.	313/506
2006/0119260	A1 *	6/2006	Kim	313/506
2007/0001594	A1 *	1/2007	Yoo et al.	313/506
2007/0132374	A1 *	6/2007	Park	313/504

* cited by examiner

Primary Examiner — Lun-Yi Lao
Assistant Examiner — Gregory J Tryder
(74) *Attorney, Agent, or Firm* — McKenna Long & Aldridge LLP

(57) **ABSTRACT**

The present invention relates to an organic electroluminescent display (OELD) device, more particularly, to a dual panel type OELD device and a method of fabricating the same. The OLED structure has first and second barrier walls having a reverse-taper shape with respect to the first substrate and first and second side surfaces, wherein the walls define novel polymer patterns with varying heights relative to each other.

17 Claims, 10 Drawing Sheets

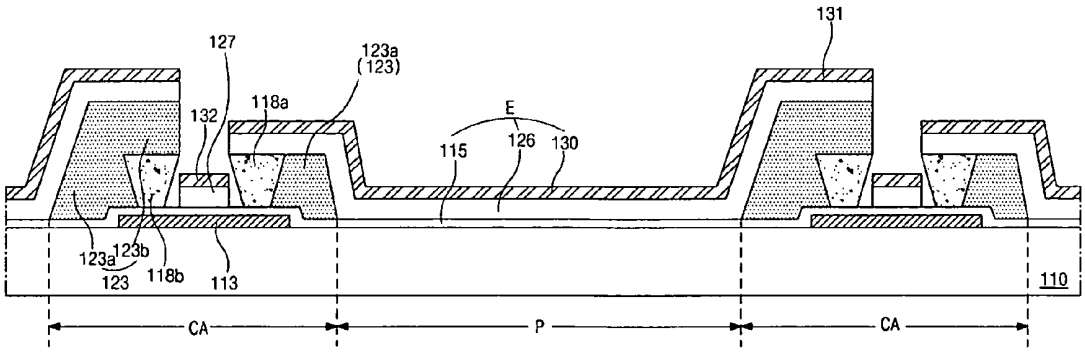

FIG. 1

Related Art

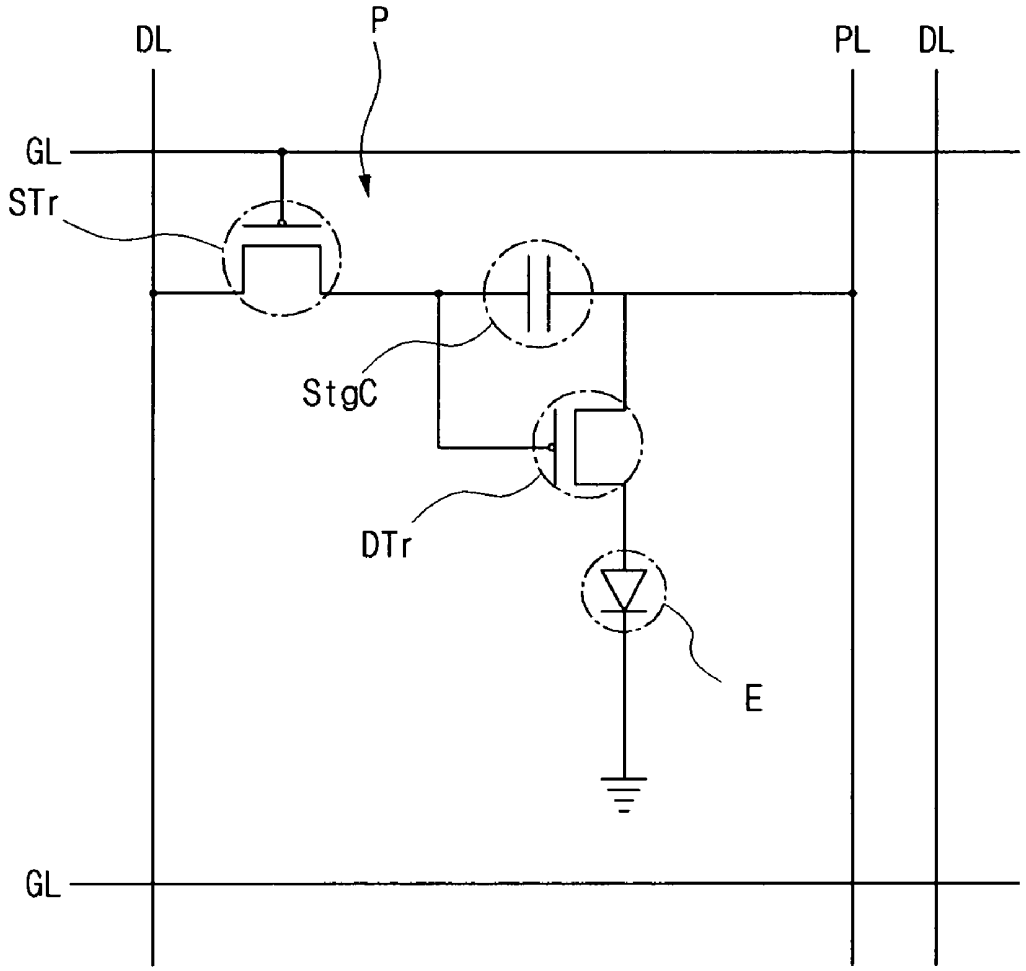

FIG. 2
Related Art

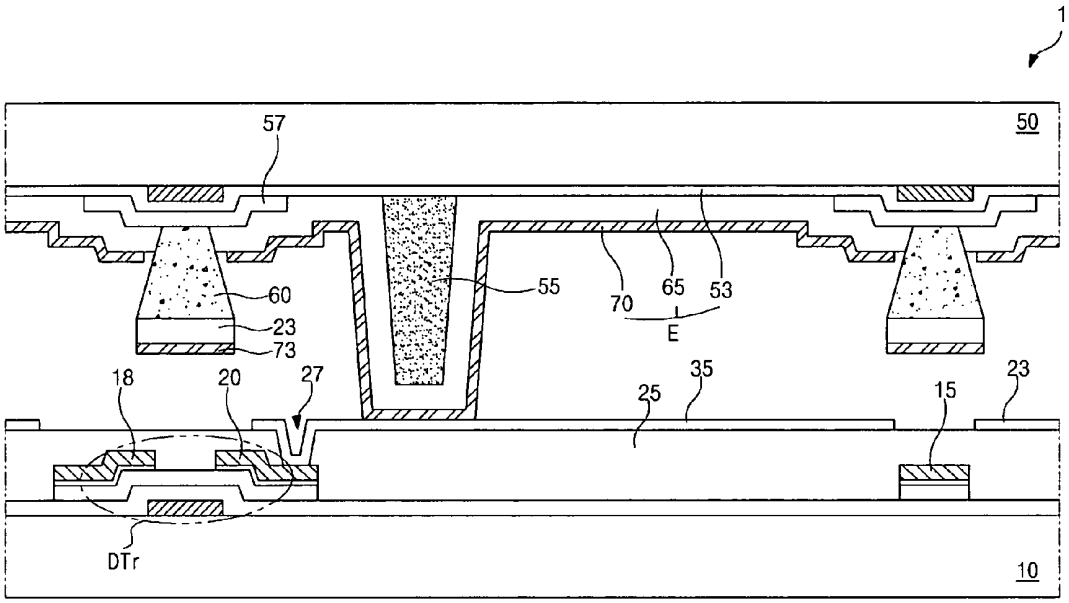

FIG. 3A

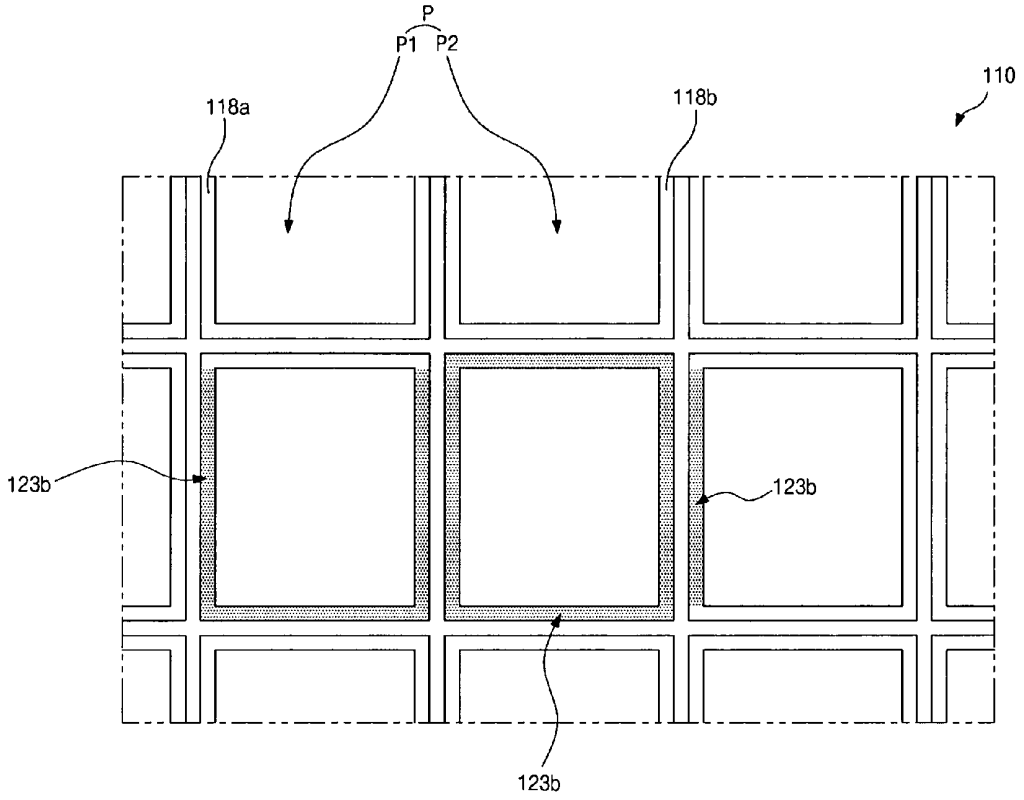

FIG. 3B

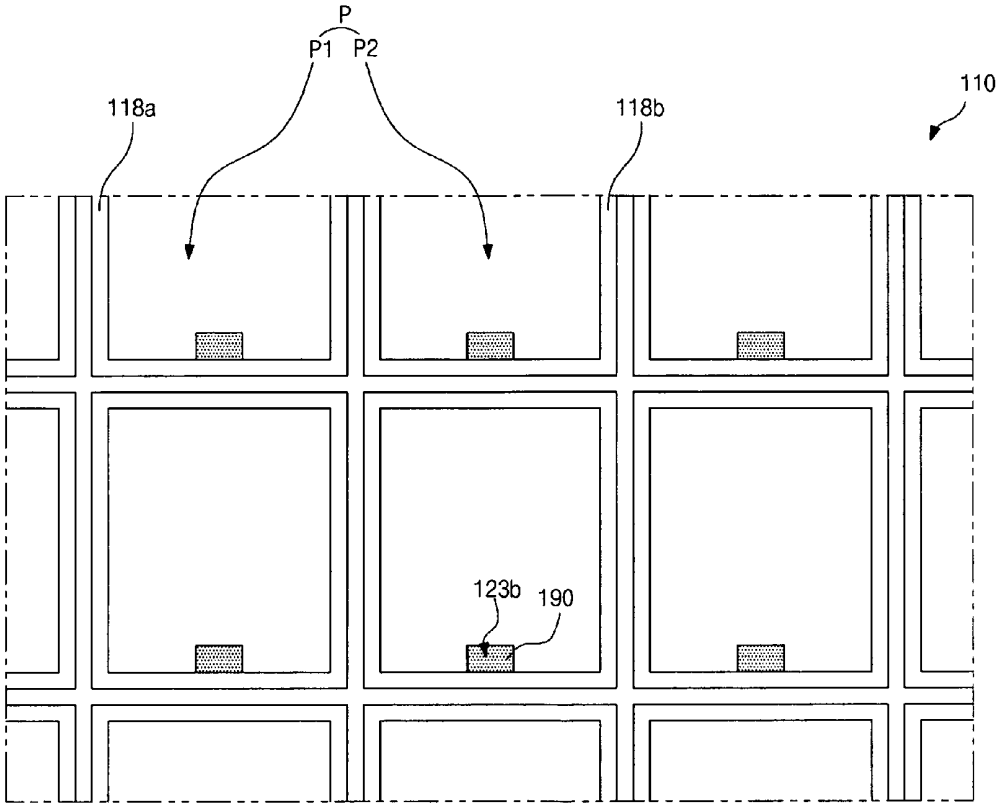

FIG. 3C

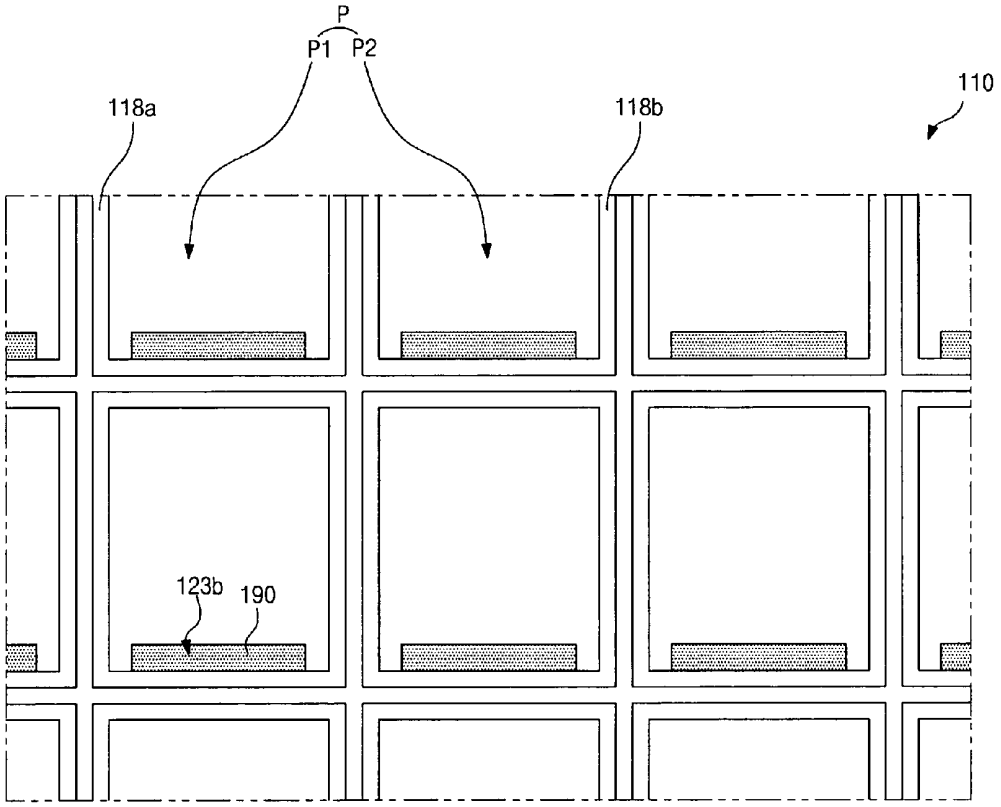

FIG. 3D

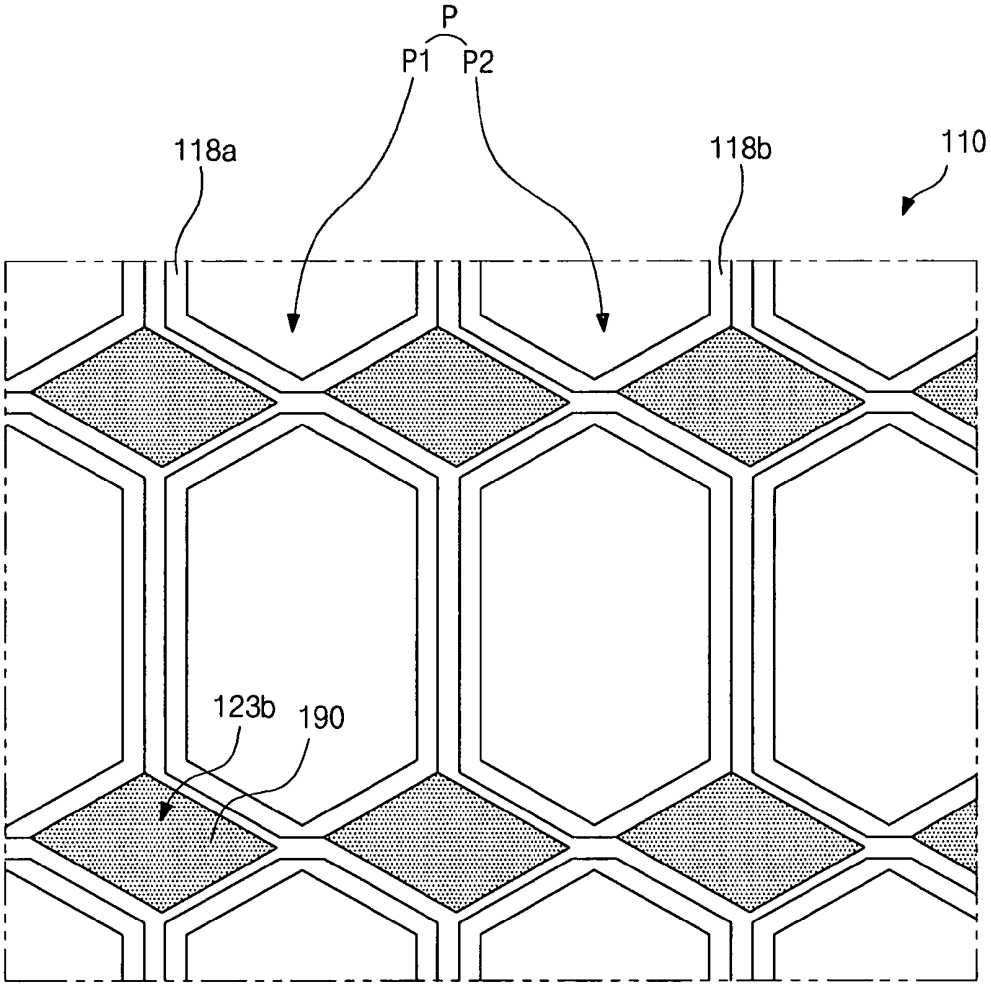

FIG. 3E

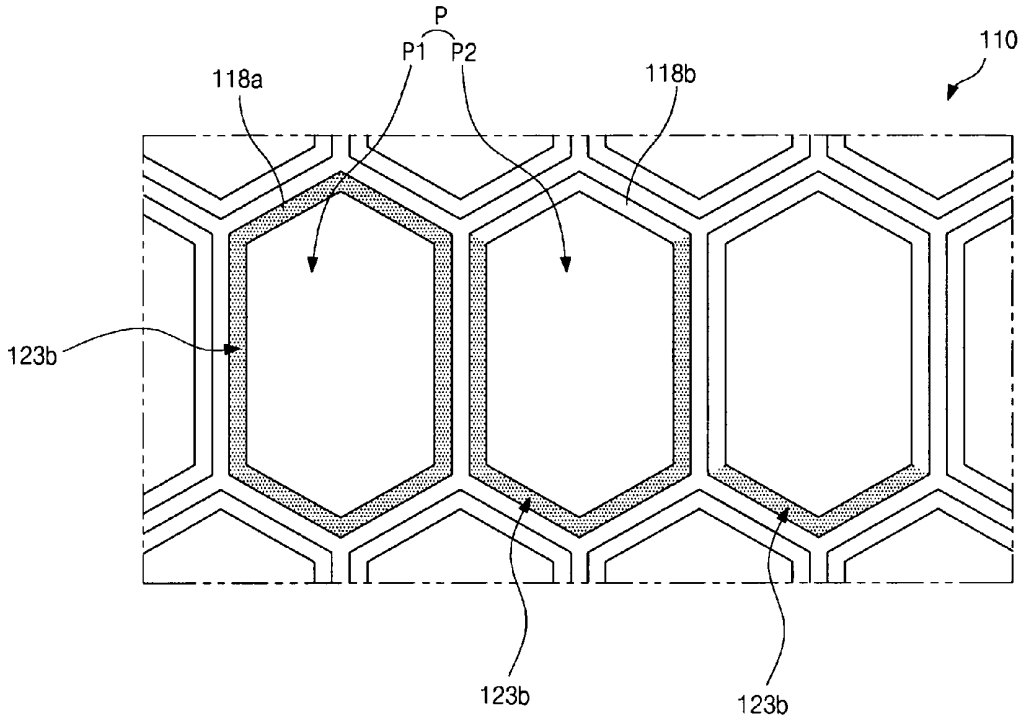

FIG. 4

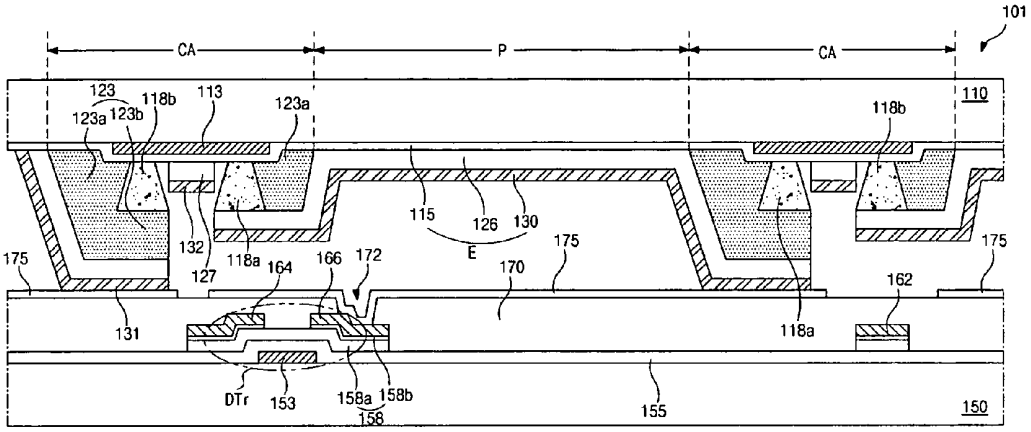
101
CA
P
CA
123
123a
123b
118b
113
123a
110
118b
115
126
130
E
175
132
127
118a
164
166
172
170
175
175
175
162
131
118a
DTr
153
158a
158b
158
155
150

FIG. 5A

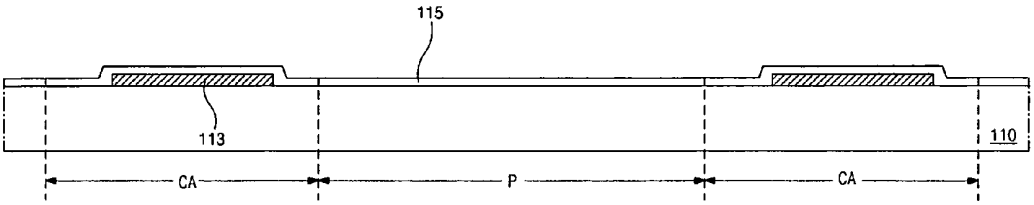

FIG. 5B

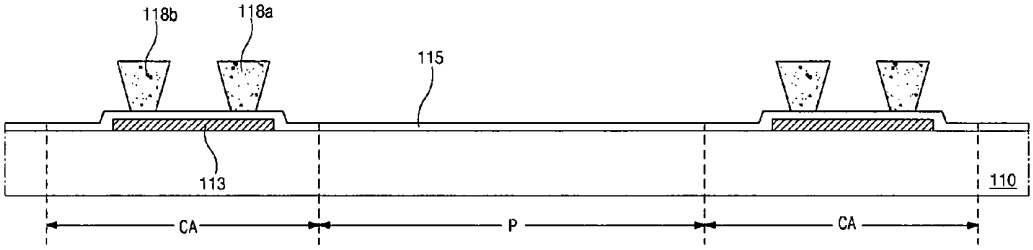

FIG. 5C

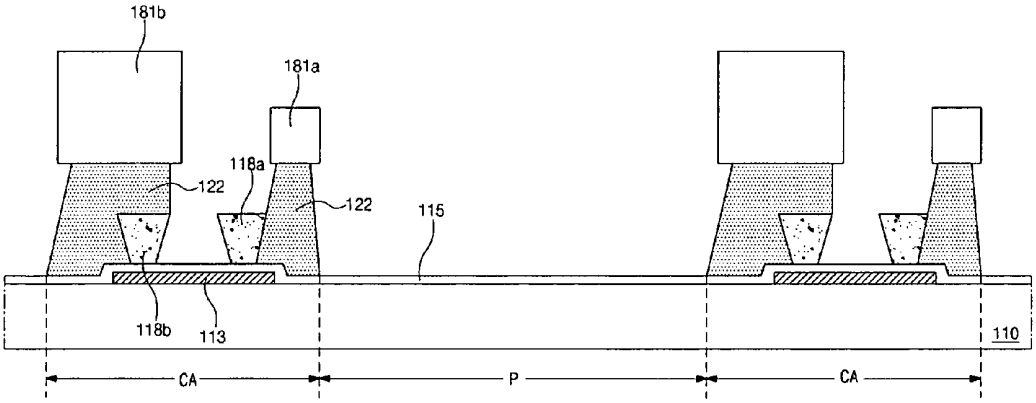

FIG. 5D

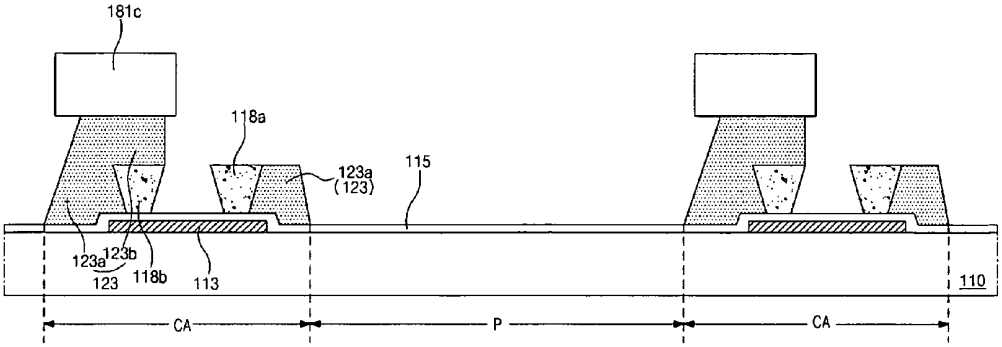

FIG. 5E

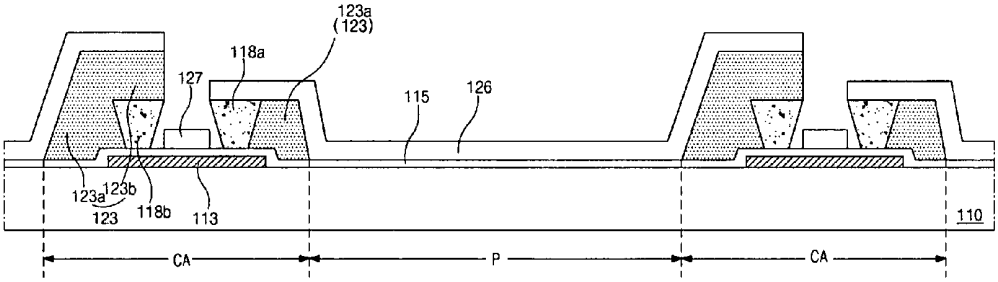

FIG. 5F

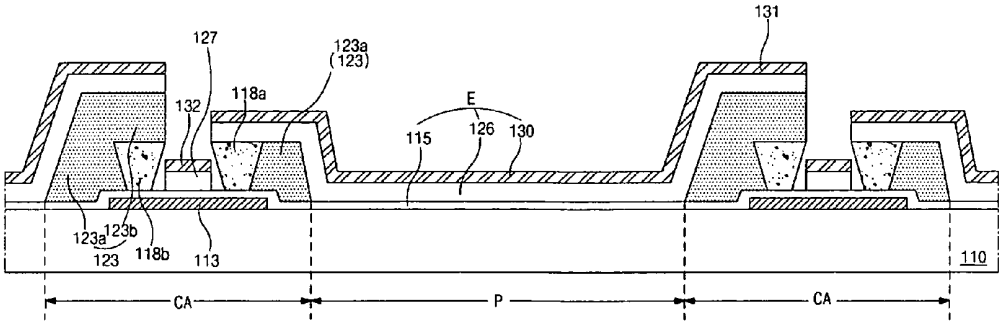

DUAL PANEL TYPE ORGANIC ELECTROLUMINESCENT DISPLAY DEVICE AND METHOD OF FABRICATING THE SAME

The present application claims the benefit of Korean Patent Application No. 10-2008-0108571 filed in Korea on Nov. 3, 2008, which is hereby incorporated by reference for all purposes as if fully set forth herein.

BACKGROUND

1. Technical Field

The present invention relates to an organic electroluminescent display (OELD) device, more particularly, to a dual panel type OELD device and a method of fabricating the same.

2. Related Art

An OELD device of new flat panel display devices is a self-emitting type. The OELD device has excellent characteristics of viewing angle, contrast ratio, and so on. Also, since the OELD device does not require a backlight assembly, the OELD device has low weight and low power consumption. Moreover, the OELD device has advantages of high response rate, low production cost, and so on.

FIG. **1** is a circuit diagram showing a pixel region of the related art OELD device. As shown in FIG. **1**, a gate line "GL", a data line "DL", a power supply line "PL", a switching thin film transistor (TFT) "STr", a storage capacitor "StgC", a driving TFT "DTr", and an organic electroluminescent diode "E" are formed in one pixel region "P". The gate line "GL" and the data line "DL" cross each other such that the pixel region "P" is defined, and the power supply line "PL" is formed to be parallel to the data line "DL". The switching TFT "STr" is formed at crossing portion of the gate and data line "GL" and "DL". The driving TFT "DTr" is electrically connected to the switching TFT "STr".

The driving TFT "DTr" is electrically connected to the organic electroluminescent diode "E". In more detail, a first electrode of the organic electroluminescent diode "E" is connected to a drain electrode of the driving TFT "DTr", and a second electrode of the organic electroluminescent diode "E" is connected to the power supply line "PL". The power supply line "PL" provides a source voltage to the organic electroluminescent diode "E". The storage capacitor "Cst" is disposed between gate and source electrodes of the driving TFT "DTr".

When a signal is applied to the switching TFT "STr" through the gate line "GL" such that the switching TFT "STr" is turned on, a signal from the data line "DL" is applied to the gate electrode of the driving TFT "DTr" such that the driving TFT "DTr" is turned on. As a result, light is emitted from the organic electroluminescent diode "E". In this case, when the driving TFT "DTr" is turned on, a level of an electric current applied from the power supply line "PL" to the organic electroluminescent diode "E" is determined such that the organic electroluminescent diode "E" can produce a gray scale. The storage capacitor "StgC" serves as maintaining the voltage of the gate electrode of the driving TFT "DTr" when the switching TFT "STr" is turned off. Accordingly, even if the switching TFT "STr" is turned off, a level of an electric current applied from the power supply line "PL" to the organic electroluminescent diode "E" is maintained to next frame.

Array elements, for example, the TFTs, and the organic electroluminescent diode including an anode, a cathode and an organic emitting layer are formed on a single substrate. Alternatively, the array elements and the organic electroluminescent diode are formed on different substrates and a connection electrode for connecting the array elements and the organic electroluminescent diode is further formed. The latter may be called as a dual panel type OELD device.

FIG. **2** is a cross-sectional view showing one pixel region of the related art dual panel type OELD device. In FIG. **2**, a gate line (not shown) and a data line **15** are formed on a first substrate **10**. The gate line and the data line **15** cross each other to define a pixel region. A switching TFT (not shown) and a driving TFT "DTr" are formed in the pixel region. A passivation layer **25** covering the switching TFT and the driving TFT "DTr" is formed. The passivation layer **25** includes a contact hole **27** exposing a drain electrode **20** of the driving TFT "DTr". A connection electrode **35** connected to the drain electrode **20** of the driving TFT "DTr" through the contact hole **27** is formed on the passivation layer **25**.

In addition, a first electrode **53** is formed on a second substrate **50**. A buffer pattern **57** corresponding to boundaries of the pixel region is formed on the first electrode **53**, and a column spacer **55** is formed on a portion of the pixel region. A wall **60** having a reverse-taper shape with respect to an inner surface of the second substrate **50** is formed on the buffer pattern **57**. Moreover, an organic emitting layer **65** and a second electrode **70** are formed on the first electrode **53**. The organic emitting layer **65** and the second electrode **70** are respectively isolated from those in adjacent pixel region. The first electrode **53**, the organic emitting layer **65** and the second electrode **70** constitute an organic electroluminescent diode "E". The second electrode **70** contacts the connection electrode **35** on the first substrate **10** such that the organic electroluminescent diode "E" is electrically connected to the driving TFT "DTr".

A seal pattern (not shown) is formed on edges of one of the first and second substrates **10** and **50** for sealing an inner space between the first and second substrates **10** and **50**. The inner space of the first and second substrates **10** and **50** is filled with an inert gas or has a vacuum condition to preventing from being damaged by moisture or air.

In a fabricating process of the dual panel type OELD device **1**, particularly, the second electrode **70** in one pixel region should be isolated from that in adjacent pixel region. To obtain this structure, the wall **60** having a reverse-taper shape is formed of an organic insulating material on the second substrate **50**. One end, which is closer to the second substrate **50** than the other end, of the wall **60** has a first cross-sectional area smaller than a second cross-sectional area of the other end. The wall **60** surrounds each pixel region. An organic emitting material and a metallic material are sequentially coated and deposited on the second substrate **50**, where the wall **60** has been formed, to form the organic emitting layer **65** and the second electrode **70**.

However, the wall **60** and the column spacer **55** for the dual panel type OELD device are formed by different process such that one more mask process is required. In addition, since there is a continuous metal pattern **73** on the wall **60**, there is a brightness problem due to particles. Moreover, since the driving TFT "DTr" on the first substrate **10** and the organic electroluminescent diode "E" have a point contact with the column spacer **55**, a possibility of a contact problem is increased.

To overcome these problems, a spacer-free type OELD device including a dual-structured wall, which serves as a connection electrode, without the column spacer is introduced. Unfortunately, there is still a problem. Since the second electrode of the organic electroluminescent diode continuously formed on the dual-structured wall is used as a connection electrode, a planarization layer is required over the second substrate to obtain an uniform height of the dual-structure wall. When the planarization layer formed of an

organic insulating material is heated, a gas is generated from the planarization layer. When the organic emitting material of the organic emitting layer is exposed to the gas, a thermal degradation is generated in the organic emitting layer such that a lifetime of the OELD device is reduced. In addition, a control of a contact area between elements on the first and second substrates of the spacer-free type OELD device is impossible.

SUMMARY

Accordingly, the present invention is directed to a dual panel type organic electroluminescent display device and a method of fabricating the same that substantially obviate one or more of the problems due to limitations and disadvantages of the related art.

Additional features and advantages of the invention will be set forth in the description which follows, and in part will be apparent from the description, or may be learned by practice of the invention. These and other advantages of the invention will be realized and attained by the structure particularly pointed out in the written description and claims hereof as well as the appended drawings.

In accordance with the present invention, as embodied and broadly described herein, a dual panel type organic electroluminescent display device includes first and second substrates facing each other and having a pixel region and a border region at a boundary of the pixel region; a first electrode in the pixel region and the border region and on the first substrate; first and second walls in the border region and on the first electrode, the first and second walls spaced apart from each other, each of the first and second walls having a reverse-taper shape with respect to the first substrate and first and second side surfaces, wherein the second side surface of the first wall faces the second side surface of the second wall, and the first side surfaces of the first and second walls are respectively opposite to the second side surfaces of the first and second walls; a first pattern covering the first side surfaces of the first and second walls and having a first height from the first electrode; a second pattern covering an upper surface of at least one of the first and second walls and having a second height from the first electrode greater than the first height; an organic emitting layer on the first electrode; a second electrode on the organic emitting layer, a portion of the second electrode covering an upper surface of the organic emitting layer on the second pattern; a switching thin film transistor in the pixel region and on the second substrate; a driving thin film transistor in the pixel region and on the second substrate, the driving thin film transistor connected to the switching thin film transistor; and a connection electrode on the second substrate and connected to the driving TFT and the portion of the second electrode.

In another aspect of the present invention, a dual panel type organic electroluminescent display device includes first and second substrates facing each other and having a pixel region and a border region at a boundary of the pixel region; a first electrode in the pixel region and the border region and on the first substrate; first and second walls in the border region and on the first electrode, the first and second walls spaced apart from each other, each of the first and second walls having a reverse-taper shape with respect to the first substrate and first and second side surfaces, wherein the second side surface of the first wall faces the second side surface of the second wall, and the first side surfaces of the first and second walls are respectively opposite to the second side surfaces of the first and second walls; a protruding portion extending from the first wall into the pixel region; a first pattern covering the first side surfaces of the first and second walls and having a first height from the first electrode; a second pattern covering an upper surface of the protruding portion and having a second height from the first electrode greater than the first height; an organic emitting layer on the first electrode and the protruding portion; a second electrode on the organic emitting layer, a portion of the second electrode covering an upper surface of the organic emitting layer on the protruding portion; a switching thin film transistor in the pixel region and on the second substrate; a driving thin film transistor in the pixel region and on the second substrate, the driving thin film transistor connected to the switching thin film transistor; and a connection electrode on the second substrate and connected to the driving TFT and the portion of the second electrode.

In yet another aspect of the present invention, a method of fabricating a dual panel type organic electroluminescent display device includes forming a first electrode on an entire surface of a first substrate having a pixel region and a border region at a boundary of the pixel region; forming first and second walls of an insulating material in the border region and on the first electrode, the first and second walls spaced apart from each other, each of the first and second walls having a reverse-taper shape with respect to the first substrate and first and second side surfaces, wherein the second side surface of the first wall faces the second side surface of the second wall, and the first side surfaces of the first and second walls are respectively opposite to the second side surfaces of the first and second walls; forming a polymer material layer on the first and second walls and having a flat top surface; forming first and second photoresist patterns on the polymer material layer and corresponding to the first and second walls, a thickness of the first photoresist pattern being smaller than a thickness of the second photoresist pattern; removing one portion of the polymer material layer exposed through the first and second photoresist patterns to form a polymer pattern covering the first side surfaces of the first and second patterns and an upper surface of each of the first and second walls; exposing a portion of the upper surface of each of the first and second walls by completely removing the first photoresist pattern and forming a third photoresist patterning by partially removing the second photoresist pattern; removing another portion of the polymer pattern exposed through the third pattern to form a first pattern covering the first side surfaces of the first and second walls and having a first height from the first electrode and a second patterning covering an upper surface of at least one of the first and second walls and having a second height from the first electrode greater than the first height; forming an organic emitting layer on the first electrode, the first and second patterns; and forming a second electrode on the organic emitting layer, a portion of the second electrode covering an upper surface of the organic emitting layer on the second pattern.

In yet another aspect of the present invention, a method of fabricating a dual panel type organic electroluminescent display device includes forming a first electrode on an entire surface of a first substrate having a pixel region and a border region at a boundary of the pixel region; forming first and second walls of an insulating material in the border region and on the first electrode and a protruding portion of the insulating material extending from the first wall into the pixel region, the first and second walls spaced apart from each other, each of the first and second walls having a reverse-taper shape with respect to the first substrate and first and second side surfaces, wherein the second side surface of the first wall faces the second side surface of the second wall, and the first side surfaces of the first and second walls are respectively opposite to the second side surfaces of the first and second walls;

forming a first pattern covering the first side surfaces of the first and second walls and having a first height from the first electrode and a second pattern covering an upper surface of the protruding portion and having a second height from the first electrode greater than the first height; forming an organic emitting layer on the first electrode and the protruding portion; forming a second electrode on the organic emitting layer, a portion of the second electrode covering an upper surface of the organic emitting layer on the protruding portion; forming a switching thin film transistor in the pixel region and on the second substrate; forming a driving thin film transistor in the pixel region and on the second substrate, the driving thin film transistor connected to the switching thin film transistor; forming a connection electrode on the second substrate and connected to the driving TFT; and attaching the first and second substrates so that the connection electrode contacts a portion of the second electrode corresponding to the second pattern.

It is to be understood that both the foregoing general description and the following detailed description are exemplary and explanatory and are intended to provide further explanation of the invention as claimed.

BRIEF DESCRIPTION OF THE DRAWINGS

The accompanying drawings, which are included to provide a further understanding of the invention and are incorporated in and constitute a part of this specification, illustrate embodiments of the invention and together with the description serve to explain the principles of the invention.

FIG. **1** is a circuit diagram showing a pixel region of the related art OELD device.

FIG. **2** is a cross-sectional view showing one pixel region of the related art dual panel type OELD device.

FIGS. **3**A to **3**E are plan view of a portion of a dual panel type OELD device according to present invention, respectively.

FIG. **4** is a cross-section view showing a pixel region of a dual panel type OELD device according to present invention.

FIGS. **5**A to **5**F are cross-sectional view illustrating a fabricating process of a dual panel type OELD device according to present invention.

DETAILED DESCRIPTION

Reference will now be made in detail to the preferred embodiments, examples of which are illustrated in the accompanying drawings.

FIGS. **3**A to **3**E are plan view of a portion of a dual panel type OELD device according to present invention, respectively. Each of FIGS. **3**A to **3**E is focused on a wall and a second pattern served as a spacer on an upper substrate of the dual panel type OELD device where an organic electroluminescent diode is formed. The second pattern is marked as a dot. FIGS. **3**A and **3**E respectively show the second patterns in adjacent pixel region have different shapes. However, they may have the same shape.

Referring to FIGS. **3**A to **3**E, first and second walls **118***a* and **118***b* spaced apart from each other are formed on an upper substrate **110**. Each of the first and second walls **118***a* and **118***b* has a reverse-taper shape. The first wall **118***a* surrounds a first pixel region "P**1**", and the second wall **118***b* surrounds a second pixel region "P**2**". Namely, the first and second walls **118***a* and **118***b* respectively surround adjacent pixel regions "P". Each of the first and second walls **118***a* and **118***b* may have a rectangular shape as shown in FIGS. **3**A to **3**C or a honey comb shape as shown in FIGS. **3**D and **3**E. Each of the first and second walls **118***a* and **118***b* may have the same width in a portion surrounding the pixel regions "P", while a portion of each of the first and second walls **118***a* and **118***b* may have a greater width than other portions of each of the first and second walls **118***a* and **118***b* as shown in FIGS. **3**B to **3**D. In FIGS. **3**B to **3**D, each of the first and second walls **118***a* and **118***b* is branched into a region, where a first connection electrode will be formed, to form a protruding portion **190**.

In FIGS. **3**B to **3**D, since the first connection electrode is formed in the region where the protruding portion **190** is formed, the upper substrate **110** and a lower substrate (not shown) has a point contact. Meanwhile, in FIGS. **3**A and **3**E, since a second pattern **123***b* having a line shape is used for connecting the upper substrate **110** and the lower substrate, the upper substrate **110** and a lower substrate has a line contact. Accordingly, the protruding portion is not required in FIGS. **3**A and **3**E.

Referring to FIG. **4**, which is a cross-section view showing a pixel region of a dual panel type OELD device according to the present invention, a wall pattern **123** including first and second patterns **123***a* and **123***b* is formed on the first and second walls **118***a* and **118***b*. The first pattern **123***a* as a buffer pattern covers an outer surface of the first and second walls **118***a* and **118***b*. The second pattern **123***b* as a spacer covers an upper surface of at least one of the first and second walls **118***a* and **118***b*.

Referring again to FIGS. **3**A to **3**E, the second pattern **123***b* has various shapes. For example, one pixel region "P" may completely be surrounded by the second pattern **123***b*. Alternatively, sides except at least one side of the rectangular or hexagonal shape pixel region P may be surrounded by the second pattern **123***b*. When the first and second walls **118***a* and **118***b* includes the protruding portion **190**, the second pattern **123***b* may be formed on the protruding portion **190** except other portions. In this case, the second pattern **123***b* has a column (pillar) or bar shape. Since the second pattern **123***b* on the first and second walls **118***a* and **118***b* has various shape, a connection area of a first connection electrode (not shown) on the second pattern **123***b* and a second connection electrode connected to a driving TFT (not shown) on the lower substrate can be controlled. For example, as shown in FIG. **3**D, when the pixel region P has a honey comb shape, the protruding portion **190** may dispose a diamond shaped region positioned among adjacent four pixel regions P.

Although not shown, a first electrode of a transparent conductive material is formed on the upper substrate **110**. An organic emitting layer emitting red, green and blue colors is formed on the first electrode. The organic emitting layer is positioned in a region surrounded by the first pattern **123***a* (of FIG. **4**) such that the organic emitting layer in one pixel region "P" is isolated from another organic emitting layer in adjacent pixel region "P". In addition, a second electrode is formed on the organic emitting layer. The organic emitting layer and the second electrode in one pixel region "P" are naturally isolated from the organic emitting layer and the second electrode in adjacent pixel region "P" due to the first and second walls **118***a* and **118***b* and the first and second patterns **123***a* and **123***b*. The first electrode, the organic emitting layer and the second electrode constitute an organic electroluminescent diode. A portion of the second electrode on the second pattern **123***b* serves as the first connection electrode. In addition, an auxiliary electrode of a low resistance material may further formed under the first electrode to improve a conductivity of the first electrode. The auxiliary electrode is positioned at boundaries of the pixel region "P".

A plurality of gate lines and a plurality of data lines are formed on the lower substrate facing the upper substrate **110**.

The gate and data lines cross each other to form the pixel region "P". A power supply line is formed on the lower substrate to be parallel to the data line. A switching TFT is formed at a crossing portion of the gate and data lines, and a driving TFT is connected to the switching TFT.

When the upper substrate **110** and the lower substrate are attached, the first connection electrode on the upper substrate contacts the second connection electrode connected to the driving TFT on the lower substrate such that the organic electroluminescent diode on the upper substrate is electrically connected to the driving TFT on the lower substrate. The upper substrate **110** and the lower substrate are sealed by a sealant along edges of at least one of the upper substrate **110** and the lower substrate to obtain the dual panel type OELD device according to the present invention. In the present invention, the organic electroluminescent diode and the driving TFT have a point contact or a line contact depending on a shape of the second pattern **123***b*.

Referring again to FIG. **4**, a cross-sectional structure of the dual panel type OELD device is explained. In FIG. **4**, the dual panel type OELD device **101** includes the upper substrate **110** and the lower substrate **150**. The auxiliary electrode **113** of a low resistance material is formed on the transparent upper substrate **110** at boundaries of a pixel region "P". The first electrode **115** of a transparent conductive material having a relatively high work function is formed on an entire surface of the upper substrate **110** to cover the auxiliary electrode **113**.

The first and second walls **118***a* and **118***b* are formed on the first electrode **115** at boundaries of the pixel region "P". In FIG. **4**, the first and second walls **118***a* and **118***b* are positioned at ends of the auxiliary electrode **113**. Each of the first and second walls **118***a* and **118***b* has a reverse-taper shape with respect to an inner surface of the upper substrate **110**. Namely, one end, which is closer to the upper substrate **110** than the other end, of each of the first and second walls **118***a* and **118***b* has a first cross-sectional area smaller than a second cross-sectional area of the other end. The first and second walls **118***a* and **118***b* are spaced apart from each other by a pre-determined distance.

The wall pattern **123** including the first and second patterns **123***a* and **123***b* is formed on the first electrode **115** to partially cover the first and second walls **118***a* and **118***b*. The first pattern **123***a* covers a first side surface of the first wall **118***a* and a first side surface of the second wall **118***b*. A second side surface of the first wall **118***a* and a second side surface of the second wall **118***b* may not be covered with the wall patterns **123**. The second side surface of the first wall **118***a* faces the second side surface of the second wall **118***b*, and the first side surfaces of the first and second walls **118***a* and **118***b* are respectively opposite to the second side surfaces of the first and second walls **118***a* and **118***b*. The second pattern **123***b* covers an upper surface of at least one of the first and second walls **118***a* and **118***b*. The second pattern **123***b* extends from the first pattern **123***a*. The second side surfaces of the first and second walls **118***a* and **118***b* have the reverse-taper shape, while a surface along the first side surfaces of the first and second walls **118***a* and **118***b* entirely has a taper shape. The second pattern **123***b* with at least one of the first and second walls **118***a* and **118***b*, where the second pattern **123***b* is formed, serves as a spacer. As explained above, the second pattern **123***b* may covers an entire surface of at least one of the first and second walls **118***a* and **118***b* or a partial surface of at least one of the first and second walls **118***a* and **118***b*. In addition, since the second pattern **123***b* has various shape, an area of the second pattern **123***b* is controllable such that a contact area of the first connection electrode **131** on the upper substrate **110** and the second connection electrode **175** on the lower substrate **150** is also controllable.

The organic emitting layer **126** is formed on the first electrode **115** the wall pattern **123**. The organic emitting layer **126** in one pixel region "P" is isolated from the organic emitting layer **126** in adjacent pixel region "P" due to the first and second walls **118***a* and **118***b* and the wall pattern **123**. For example, the organic emitting layers **126** in three adjacent pixel regions "P" respectively emit red, green and blue colors. FIG. **4** shows the organic emitting layer **126** of a single layer. However, to improve an emitting efficiency, the organic emitting layer **126** may include a multiple layer of an electron injection layer, an electron transporting layer, an organic emitting material layer, a hole transporting layer and a hole injection layer.

The second electrode **130** is formed on the organic emitting layer **126**. The second electrode **130** in one pixel region "P" is also isolated from the second electrode **130** in adjacent pixel region "P" due to the first and second walls **118***a* and **118***b* and the wall pattern **123**. The second electrode **130** may be formed of a metallic material having a relatively high work function, for example, aluminum (Al) or Al alloy. The first electrode **115**, the organic emitting layer **126** and the second electrode **130** constitute the organic electroluminescent diode "E". The second electrode **130** is stacked over the first and second walls **118***a* and **118***b* and the first and second patterns **123***a* and **123***b*. A portion of the second electrode **130** is stacked over the second pattern **123***b* servers as a first connection electrode **131**. The first connection electrode **131** contacts the second connection electrode **175** on the lower substrate **150** such that the second electrode **130** of the organic electroluminescent diode "E" is electrically connected to the driving TFT "DTr". During a step of forming the organic emitting layer **126** and the second electrode **130**, there are an organic pattern **127** and a metal pattern **132** between the first and second walls **118***a* and **118***b*.

On the lower substrate **150**, the gate lines (not shown) and the data lines **162** are formed with a gate insulating layer **155** interposed therebetween. The gate line and the data line **162** cross each other such that the pixel region "P" is defined. The switching TFT (not shown) connected to the gate line and the data line **162** is formed at a crossing portion of the gate line and the data line **162**. At least one driving TFT "DTr" is electrically connected to the switching TFT. FIG. **4** shows a single driving TFT "DTr". Each of the switching TFT and the driving TFT "DTr" includes a gate electrode **153**, a semiconductor layer **158** including an active layer **158***a* and an ohmic contact layer **158***b*, a source electrode **164** and a drain electrode **166**, which are sequentially stacked. It may be called as a bottom gate structure. Alternatively, each of the switching TFT and the driving TFT "DTr" may have a top gate structure.

A passivation layer **170** including a contact hole **172** is formed on the switching TFT and the driving TFT "DTr". The contact hole **172** exposes an electrode, for example, the drain electrode **166**, of the driving TFT "DTr". The passivation layer **170** is formed of an organic insulating material to form a flat top surface. Alternatively, the passivation layer **170** may be formed of an inorganic insulating material to form an uneven top surface depending on below structure.

The second connection electrode **175** connected to the drain electrode **166** of the driving TFT "DTr" is formed on the passivation layer **170**. The upper and lower substrates **110** and **150** are attached such that the first connection electrode **131** on the upper substrate **110** contacts the second connection electrode **175** on the lower substrate **150**. Although not shown, a seal pattern is formed along edges of at least one of the upper and lower substrates **110** and **150** to seal the upper

and lower substrates **110** and **150**. An inner space between the upper and lower substrates **110** and **150** has a vacuum condition or an inert gas condition. In addition, a getter pattern for absorbing moisture may be further formed.

Referring to FIGS. **5**A to **5**F, a fabricating process of a dual panel type OELD device according to the present invention is explained. FIGS. **5**A to **5**F are cross-sectional view illustrating a fabricating process of a dual panel type OELD device according to present invention. A region, where the wall is formed, is defined as a border region "CA".

In FIG. **5**A, the auxiliary electrode **113** is formed on the upper substrate **110** in the border region "CA" by depositing and pattering a first metal layer (not shown) through a mask process. The first metal layer may include a low resistance metallic material, such as Al, Al alloy, copper (Cu), Cu alloy and chromium (Cr). The mask process may include a step of forming a photoresist (PR) layer, a step of exposing the PR layer using a mask, a step of developing the exposed PR layer to form a PR pattern and a step of etching the first metal layer using the PR pattern as an etching mask. The auxiliary electrode **113** may have a lattice shape along boundaries of the pixel region "P" or a linear shape along a side of the pixel region "P".

The first electrode **115** of a transparent conductive material having a relatively high work function, such as indium-tin-oxide (ITO) and indium-zinc-oxide (IZO), is formed on an entire surface of the upper substrate **110** to cover the auxiliary electrode **113**. The auxiliary electrode **113** is formed to improve a conductivity of the first electrode **115**. The auxiliary electrode **113** may be omitted.

In FIG. **5**B, the first and second walls **118***a* and **118***b* are formed on the first electrode **115** in the border region "CA" by coating and pattering an organic insulating material layer (not shown). Each of the first and second walls **118***a* and **118***b* has a reverse-taper shape. The organic insulating material has a negative photosensitive property such that the organic insulating material layer having the reverse-taper shape can be obtained. A portion of the organic insulating material layer having a negative photosensitive property is chemically changed when being exposed to light such that the exposed portion remains after a developing process. When the organic insulating material layer is exposed to light, amount of light to a top surface of the organic insulating material layer is different from amount of light to a bottom surface of the organic insulating material layer. The exposed organic insulating material layer is developed such that the reverse-taper shape can be obtained.

In FIG. **5**C, a polymer material layer (not shown) is formed on an entire surface of the upper substrate **110**, where the first and second walls **118***a* and **118***b* are formed, by coating a polymer material, for example, polyimide. A PR layer (not shown) is further formed on the polymer material layer, and then the PR layer is exposed and developed using a diffractive exposing method or a half-tone exposing method to form a first PR pattern **181***a* having a first thickness and a second PR pattern **181***b* having a second thickness greater than the first thickness. In the diffractive exposing method or the half-tone exposing method, an exposing mask including a transmissive portion, a half-transmissive portion and a blocking portion. The half-transmissive portion has a transmissivity smaller than transmissive portion and larger than the blocking portion. The first PR pattern **181***a* is formed a first region where the first pattern **123***a* will be formed, and the second PR pattern **181***b* is formed a second region where the second pattern **123***b* will be formed.

Next, a portion of the polymer material layer exposed through the first and second PR patterns **181***a* and **181***b* is etched to form a polymer pattern **122** covering the first side surfaces of the first and second walls **118***a* and **118***b* and the upper surface of at least one of the first and second walls **118***a* and **118***b*. The polymer pattern **122** corresponding to the first wall **118***a* has the same height from the first electrode **115** as the polymer pattern **122** corresponding to the second wall **118***b*.

Next, in FIG. **5**D, the first and second PR patterns **181***a* and **181***b* (of FIG. **5**C) are ashed to remove the first PR pattern **181***a* and form a third PR pattern **181***c* from the second PR pattern **181***b*. The exposed polymer pattern **122** by removing the first PR pattern **181***a* is dry-etched to have the same height as the first wall **118***a*. The polymer pattern **122** corresponding to the second wall **118***b* is covered with the third PR pattern **181***c* such that the polymer pattern **122** corresponding to the first wall **118***a* has a different in height from the first electrode **115** as the polymer pattern **122** corresponding to the second wall **118***b*. The polymer pattern **122** corresponding to the first wall **118***a* covers the first side surface of the first wall **118***a*, not the upper surface of the first wall **118***a*. The polymer pattern **122** corresponding to the first wall **118***a* is defined as the first pattern **123***a* of the wall pattern **123**.

The polymer pattern **122** corresponding to the second wall **118***b* covers not only the first side surface of the second wall **118***b* but also the upper surface of the second wall **118***b*. A portion of the polymer pattern **122** covering the first side surface of the second wall **118***b* is defined as the first pattern **123***a*, and a portion of the polymer pattern **122** covering the upper surface of the second wall **118***b* is defined as the second pattern **123***b* of the wall pattern **123**. As a result, the second pattern **123***b* has a greater height from the first electrode **115** than the first pattern **123***a*. The first pattern **123***a* serves as a buffer pattern in the related art dual panel type OELD device, and the second pattern **123***b* serves as a spacer.

Next, in FIG. **5**E, the third PR pattern **181***c* (of FIG. **5**D) on the second pattern **123***b* is removed by a stripping process, and then the organic emitting layer **126** is formed on the first and second patterns **123***a* and **123***b* and the first electrode **115** in the pixel region "P" by depositing an organic emitting material or coating an organic emitting material by a nozzle coating apparatus or an inkjet apparatus. The organic emitting layer **126** emits red, green and blue colors. The organic emitting layer **126** also covers an upper surface of the second pattern **123***b*. At the same time, an organic pattern **127** is formed in a space between the first and second patterns **123***a* and **123***b*.

Next, in FIG. **5**F, the second electrode **130** is formed on the organic emitting layer **126** by depositing a metallic material having a relatively low work function, for example, Al or Al alloy. The metallic material of the second electrode **130** has a work function smaller than the transparent conductive material of the first electrode **115**. At the same time, a metal pattern **132** is formed on the organic pattern **127**. Namely, the organic pattern **127** and the metal pattern **132** are positioned in the border region "CA". The organic patter **127** and the metal pattern **132** are respectively discontinuous from the organic emitting layer **126** and the second electrode **130** because of the first and second walls **118***a* and **118***b*. The organic emitting layer **126** and the second electrode **130** in one pixel region "P" are naturally isolated from those in adjacent pixel region "P" due to the first and second walls **118***a* and **118***b*. A portion of the second electrode **130** covering the organic emitting layer on the second pattern **123***b* serves as the first connection electrode **131**. The first electrode **115**, the organic emitting layer **126** and the second electrode **130** constitute the organic electroluminescent diode "E".

Referring back to FIG. **4**, the upper substrate **110** and the lower substrate **150**, where the switching TFT, the driving TFT "DTr" and the second connection electrode **175** are formed, face so that the first connection electrode **131** on the second pattern **123***b* contacts the second connection electrode **175** connected to the driving TFT "DTr". And then, a seal pattern (not shown) is formed along edges of the upper and lower substrates **110** and **150**, and the upper and lower substrates **110** and **150** are attached with a vacuum condition or an inert gas condition therein such that the dual panel type OELD device **101** is obtained.

It will be apparent to those skilled in the art that various modifications and variations can be made in the present invention without departing from the spirit or scope of the invention. Thus, it is intended that the present invention cover the modifications and variations of this invention provided they come within the scope of the appended claims and their equivalents.

What is claimed is:

1. A dual panel type organic electroluminescent display device, comprising:

a first and a second substrates facing each other and having a pixel region and a border region at a boundary of the pixel region;

a first electrode in the pixel region and the border region and on the first substrate;

a first and a second walls in the border region and on the first electrode, the first and the second walls spaced apart from each other, each of the first and the second walls having a reverse-taper shape with respect to the first substrate and a first and a second side surfaces, wherein the second side surface of the first wall faces the second side surface of the second wall, and the first side surfaces of the first and the second walls are respectively opposite to the second side surfaces of the first and the second walls;

a first pattern covering the first side surfaces of the first and the second walls and having a first height from the first electrode;

a second pattern covering an upper surface of one of the first and the second walls and having a second height from the first electrode greater than the first height;

an organic emitting layer on the first electrode, the second pattern and the first pattern on the other one of the first and the second walls;

a second electrode on the organic emitting layer, a portion of the second electrode covering an upper surface of the organic emitting layer on the second pattern;

a switching thin film transistor in the pixel region and on the second substrate;

a driving thin film transistor in the pixel region and on the second substrate, the driving thin film transistor connected to the switching thin film transistor; and

a connection electrode on the second substrate and connected to the driving TFT and the portion of the second electrode,

wherein a first portion of the second electrode corresponding to the first wall and a second portion of the second electrode corresponding to the second wall have a difference in a distance from the second substrate, and the organic emitting layer contacts an upper surface of the other one of the first and the second walls.

2. The device according to claim **1**, wherein each of the first and second patterns is formed of a polyimide.

3. The device according to claim **1**, wherein the second pattern partially covers the upper surface of the one of the first and the second walls.

4. The device according to claim **1**, wherein the second pattern entirely covers the upper surface of the one of the first and the second walls.

5. The device according to claim **1**, wherein each of the first and the second walls includes a protruding portion protruding from each of the first and second the walls to an inner or outer side of the pixel region, and the second pattern covering an upper surface of the protruding portion.

6. The device according to claim **5**, wherein the pixel region has a honey comb shape, and the protruding portion is disposed in a diamond shaped region positioned among adjacent four pixel regions, and wherein a portion of the second electrode is disposed on the protruding portion and the connection electrode contacts the portion of the second electrode on the protruding portion.

7. The device according to claim **1**, further comprising an auxiliary electrode of a low resistance metallic material in the border region and between the first substrate and the first electrode.

8. A dual panel type organic electroluminescent display device, comprising:

a first and a second substrates facing each other and having a pixel region and a border region at a boundary of the pixel region;

a first electrode in the pixel region and the border region and on the first substrate;

a first and a second walls in the border region and on the first electrode, the first and the second walls spaced apart from each other, each of the first and the second walls having a reverse-taper shape with respect to the first substrate and a first and a second side surfaces, wherein the second side surface of the first wall faces the second side surface of the second wall, and the first side surfaces of the first and second walls are respectively opposite to the second side surfaces of the first and second walls;

a protruding portion extending from at least one of the first wall and the second wall into the pixel region;

a first pattern covering the first side surfaces of the first and the second walls and having a first height from the first electrode;

a second pattern covering an upper surface of the protruding portion and having a second height from the first electrode greater than the first height;

an organic emitting layer on the first electrode and the protruding portion;

a second electrode on the organic emitting layer, a portion of the second electrode covering an upper surface of the organic emitting layer on the protruding portion;

a switching thin film transistor in the pixel region and on the second substrate;

a driving thin film transistor in the pixel region and on the second substrate, the driving thin film transistor connected to the switching thin film transistor; and

a connection electrode on the second substrate and connected to the driving TFT and the portion of the second electrode.

9. A method of fabricating a dual panel type organic electroluminescent display device, comprising:

forming a first electrode on an entire surface of a first substrate having a pixel region and a border region at a boundary of the pixel region;

forming a first and a second walls of an insulating material in the border region and on the first electrode, the first and the second walls spaced apart from each other, each of the first and the second walls having a reverse-taper shape with respect to the first substrate and a first and a second side surfaces, wherein the second side surface of

the first wall faces the second side surface of the second wall, and the first side surfaces of the first and the second walls are respectively opposite to the second side surfaces of the first and the second walls;

forming a polymer material layer on the first and the second walls and having a flat top surface;

forming a first and a second photoresist patterns on the polymer material layer and corresponding to the first and the second walls, a thickness of the first photoresist pattern being smaller than a thickness of the second photoresist pattern;

removing a first portion of the polymer material layer exposed through the first and second the photoresist patterns to form a polymer pattern covering the first side surfaces of the first and the second walls and an upper surface of each of the first and the second walls;

exposing a portion of the upper surface of each of the first and the second walls by completely removing the first photoresist pattern and forming a third photoresist patterning by partially removing the second photoresist pattern;

removing a second portion of the polymer pattern exposed through the third photoresist pattern to form a first pattern covering the first side surfaces of the first and the second walls and having a first height from the first electrode and a second pattern covering an upper surface of one of the first and the second walls and having a second height from the first electrode greater than the first height;

forming an organic emitting layer on the first electrode, the first and the second patterns; and

forming a second electrode on the organic emitting layer, a portion of the second electrode covering an upper surface of the organic emitting layer on the second pattern,

wherein a first portion of the second electrode corresponding to the first wall and a second portion of the second electrode corresponding to the second wall have a difference in a distance from the second substrate, and the organic emitting layer contacts an upper surface of the other one of the first and the second walls.

10. The method according to claim **9**, wherein the step of forming the first and second walls includes forming a protruding portion protruding from each of the first and second walls to an inner or outer side of the pixel region.

11. The method according to claim **10**, wherein the pixel region has a honey comb shape, and the protruding portion is disposed in a diamond shaped region positioned among adjacent four pixel regions, and wherein a portion of the second electrode is disposed on the protruding portion.

12. The method according to claim **11**, wherein the second pattern covering an upper surface of the protruding portion.

13. The method according to claim **9**, wherein the second pattern partially covers the upper surface of the one of the first and the second walls.

14. The method according to claim **9**, wherein the second pattern entirely covers the upper surface of the one of the first and the second walls.

15. The method according to claim **9**, further comprising forming an auxiliary electrode of a low resistance metallic material in the border region on the first substrate before the step of forming the first electrode.

16. The method according to claim **9**, further comprising:

forming a gate and a data lines on a second substrate and crossing each other to define the pixel region;

forming a switching thin film transistor connected to the gate and the data lines and on the second substrate;

forming a driving thin film transistor connected to the switching thin film transistor and on the second substrate;

forming a connection electrode on the second substrate and connected to the driving thin film transistor; and

attaching the first and second substrates so that the connection electrode contacts a portion of the second electrode corresponding to the second pattern.

17. A method of fabricating a dual panel type organic electroluminescent display device, comprising:

forming a first electrode on an entire surface of a first substrate having a pixel region and a border region at a boundary of the pixel region;

forming a first and a second walls of an insulating material in the border region and on the first electrode and a protruding portion of the insulating material extending from the first wall into the pixel region, the first and the second walls spaced apart from each other, each of the first and the second walls having a reverse-taper shape with respect to the first substrate and the first and the second side surfaces, wherein the second side surface of the first wall faces the second side surface of the second wall, and the first side surfaces of the first and second walls are respectively opposite to the second side surfaces of the first and the second walls;

forming a first pattern covering the first side surfaces of the first and the second walls and having a first height from the first electrode and a second pattern covering an upper surface of the protruding portion and having a second height from the first electrode greater than the first height;

forming an organic emitting layer on the first electrode and the protruding portion;

forming a second electrode on the organic emitting layer, a portion of the second electrode covering an upper surface of the organic emitting layer on the protruding portion;

forming a switching thin film transistor in the pixel region and on the second substrate;

forming a driving thin film transistor in the pixel region and on the second substrate, the driving thin film transistor connected to the switching thin film transistor;

forming a connection electrode on the second substrate and connected to the driving TFT; and

attaching the first and the second substrates so that the connection electrode contacts a portion of the second electrode corresponding to the second pattern.

* * * * *

专利名称(译)	双面板型有机电致发光显示装置及其制造方法		
公开(公告)号	US8395569	公开(公告)日	2013-03-12
申请号	US12/588257	申请日	2009-10-08
[标]申请(专利权)人(译)	闵庆熙 BAE盛骏 李俊SUK KIM DO HYUNG		
申请(专利权)人(译)	MIN KYUNG-HEE BAE晟准 李准硕 KIM DO亨		
当前申请(专利权)人(译)	LG DISPLAY CO. , LTD.		
[标]发明人	MIN KYUNG HEE BAE SUNG JOON LEE JOON SUK KIM DO HYUNG		
发明人	MIN, KYUNG-HEE BAE, SUNG-JOON LEE, JOON-SUK KIM, DO-HYUNG		
IPC分类号	G09G3/32		
CPC分类号	H01L27/3253 H01L27/3246		
优先权	1020080108571 2008-11-03 KR		
其他公开文献	US20100110048A1		
外部链接	Espacenet USPTO		

摘要(译)
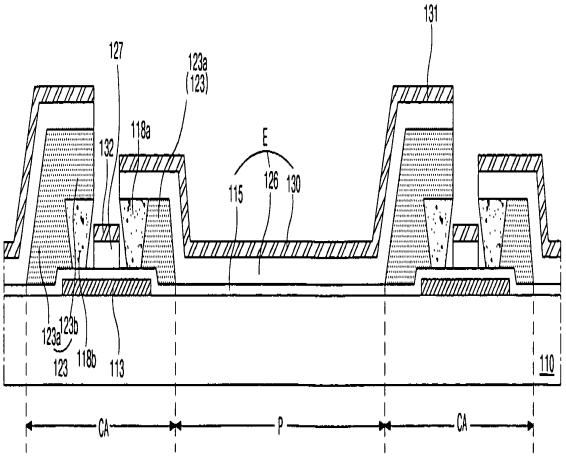
双面板型OELD器件及其制造方法技术领域本发明涉及有机电致发光显示器（OELD）器件，更具体地，涉及双面板型OELD器件及其制造方法。OLED结构具有相对于第一基板和第一和第二侧表面具有倒锥形状的第一和第二阻挡壁，其中壁限定了相对于彼此具有不同高度的新型聚合物图案。